Service Manual

INSTALLATION

A minimum of 20 pounds (1.4 bar) of water pressure is required for regeneration valve to operate effectively.

An uninterrupted alternating current (A/C) supply is required. Note: Other voltages are available. Please make sure your voltage supply is compatible with your unit before installation.

Condition of existing plumbing should be free from lime and

Rotate the skipper wheel until the number “1” is at the red pointer. Set the days that regeneration is to occur by sliding tabs on the skipper wheel outward to expose trip fngers. Each tab is one day. Finger at red pointer is tonight. Moving clockwise from the red pointer, extend or retract fngers to obtain the desired regeneration schedule.

1.

Calculate the gallon capacity of the system, subtract the necessary reserve requirement and set the gallons available opposite the small white dot on the program wheel gear (Figure 3).

1. Press and hold the red button in to disengage the drive gear.
2. Turn the large gear until the actual time of day is opposite the time of day pointer.
3. Release the red button to again engage the drive gear.

Any Time

1. Turn the manual regeneration knob clockwise.
2. This slight movement of the manual regeneration knob engages the program wheel and starts the regeneration program.
3.

    3.

        3.

The regeneration cycle program on your water conditioner has been factory preset, however, portions of the cycle or program may be lengthened or shortened in time to suit local conditions.

1. To expose cycle program wheel, grasp timer in upper left-hand corner and pull, releasing snap retainer and swinging timer to the right.
2. To change the regeneration cycle program, the program wheel must be removed. Grasp program wheel and squeeze protruding lugs toward center, lift program wheel off timer. Switch arms may require movement to facilitate removal.
3. Return timer to closed position engaging snap retainer in back plate. Make certain all electrical wires locate above snap retainer post.

The program wheel as shown in the drawing is in the service position. As you look at the numbered side of the program wheel, the group of pins starting at zero determines the length of time your unit will backwash.

For example, if there are six pins in this section, the time of backwash will be 12 min. (2 min. per pin). To change the length of backwash time, add or remove pins as required. The number of pins times two equals the backwash time in minutes.

1. The group of holes between the last pin in the backwash section and the second group of pins determines the length of time that your unit will brine and rinse (2 min. per hole).
2. To change the length of brine and rinse time, move the rapid rinse group of pins to give more or fewer holes in the brine and rinse section. Number of holes times two equals brine and rinse time in minutes.

1. The second group of pins on the program wheel determines the length of time that your water conditioner will rapid rinse (2 min. per pin).
2. To change the length of rapid rinse time, add or remove pins at the higher numbered end of this section as required. The number of pins times two equals the rapid rinse time in minutes.

1. The second group of holes in the program wheel determines the length of time that your water conditioner will refill the brine tank (2 min. per hole).
2. To change the length of refill time, move the two pins at the end of the second group of holes as required.
3. The regeneration cycle is complete when the outer microswitch is tripped by the two pin set at end of the brine tank refill section.
4. The program wheel, however, will continue to rotate until the inner micro switch drops into the notch on the program wheel.

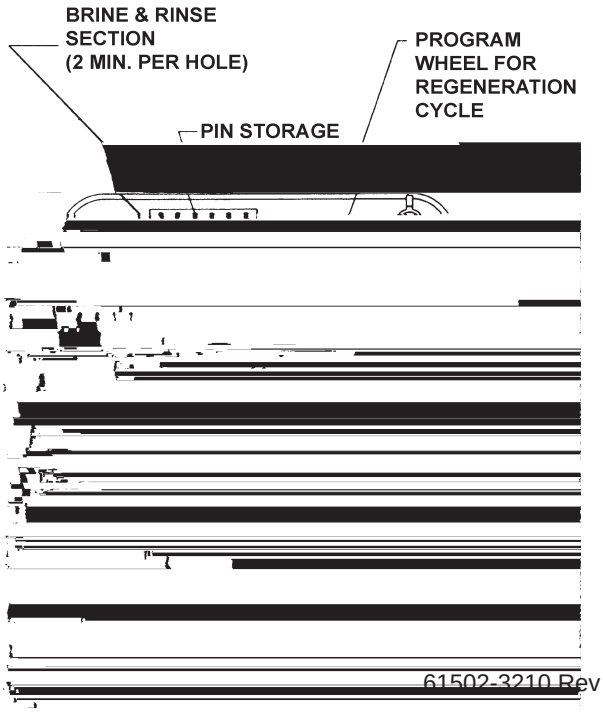

Figure 4

3220 METER IMMEDIATE TIMER ASSEMBLY

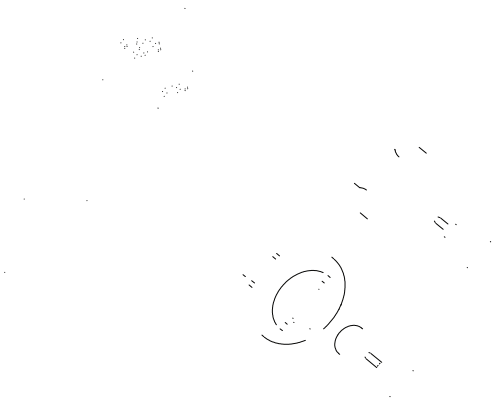

1	1	13870	Housing, Timer
2	1	15431	Gear, Cycle Actuator, System #5
3	1	13886	Knob, 3200
4	4	13296	Screw, Hex Wsh, 6-20 x 1/2
5	2	11999	Label, Button
6	1	60408-50	Program Wheel, W/2" Std Label
7	1	13806	Retainer, Program Wheel
8	1	13748	Screw, Flt Hd St, 6-20 x 1/2
9	1	14265	Spring Clip
10	1	13018	Pinion, Idler
11	1	18563	Idler Shaft Spring
12	1	13017	Gear, Idler
13	1	13164	Drive Gear
14	1	13887	Plate, Motor Mounting
15	1	18743-1	Motor, 120V, 60 Hz, 1/30 RPM
	1	18752-1	Motor, 100V, 50Hz, 1/30 RPM
	1	18824-1	Motor, 23V, 50Hz, 1/30 RPM
	1	18826-1	Motor, 24V, 50Hz, 1/30 RPM
	1	19659-1	Motor, 24V, 60Hz, 1/30 RPM
	1	19660-1	Motor, 230V, 60Hz, 1/30 RPM
16	2	13278	Screw, Sltd Fillister Hd
17	1	14502	Pinion, Program Wheel
18	1	14501	Clutch, Drive Pinion
19	1	14276	Meter Clutch Spring
20	1	14253	Retainer, Clutch Spring
21	3	11384	Screw, Phil, 6-32 x 1/4 Zinc
22	1	13881	Bracket, Hinge Timer
23	3	14087	Insulator
24	1	15414-00	Micro Switch
25	1	15320	Switch, Micro, Timer
26	2	11413	Screw, Pan Hd Mach, 4-40 x 1-1/8
27	1	14198	Label, Indicator
28	1	15465	Label, Caution
29	1	14007	Label, Time of Day
30	1	15148	Label, Instruction
31	1	40617	Harness, 3220
32	2	40422	Nut, Wire, Tan
33	1	15354-01	Wire, Ground, 4"
34	1	19210-05	Program Wheel Assembly, 9000/3230
35	17	41754	Pin, Spring, 1/16 x 5/8 Stainless Steel, Timer
36	1	15055	Gear, Main Drive

3230 REMOTE START TIMER ASSEMBLY

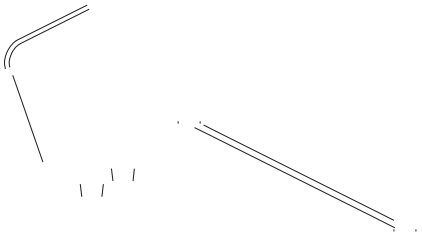

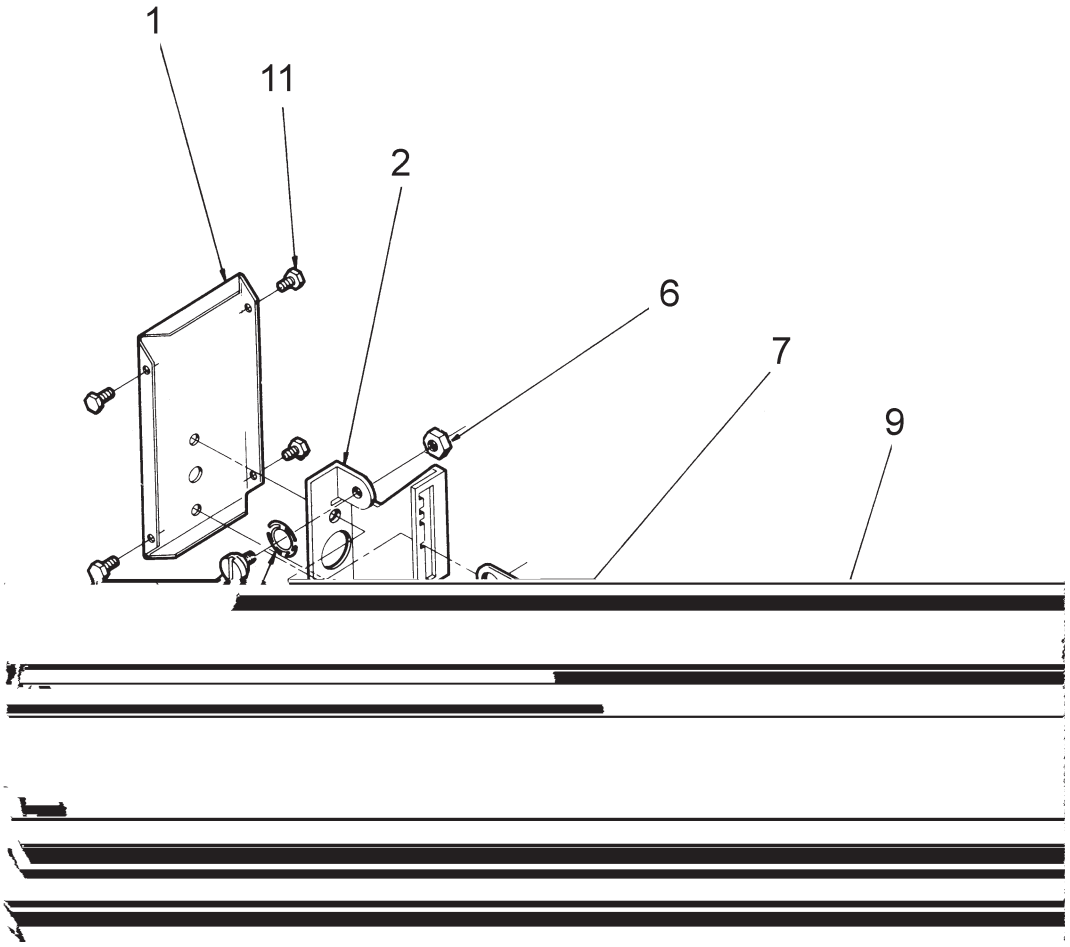

60409 Rev G

1	1	12593	Backplate, Manual
2	1	12592	Bracket, Lever Position
3	1	12596	Screw, Spec Mach, 1/4 - 20 x 1/2
4	1	12707	Washer, Spring
6	1	11235	Nut, Hex, 1/4 - 20, Mach Screw, Zinc
7	1	12594	Lever, Valve Position
8	2	10231	Screw, Slot Hex, 1/4 - 20 x 1/2 18-8 SS
9	1	60224-32	Cover Assy, Manual, Filter
	1	60224-33	Cover Assy, Manual, Softener
11	4	10300	Screw, Slot Hex Wsh, 8-18 x 3/8 Type “B” RC44-47
	1	10909	Pin, Link

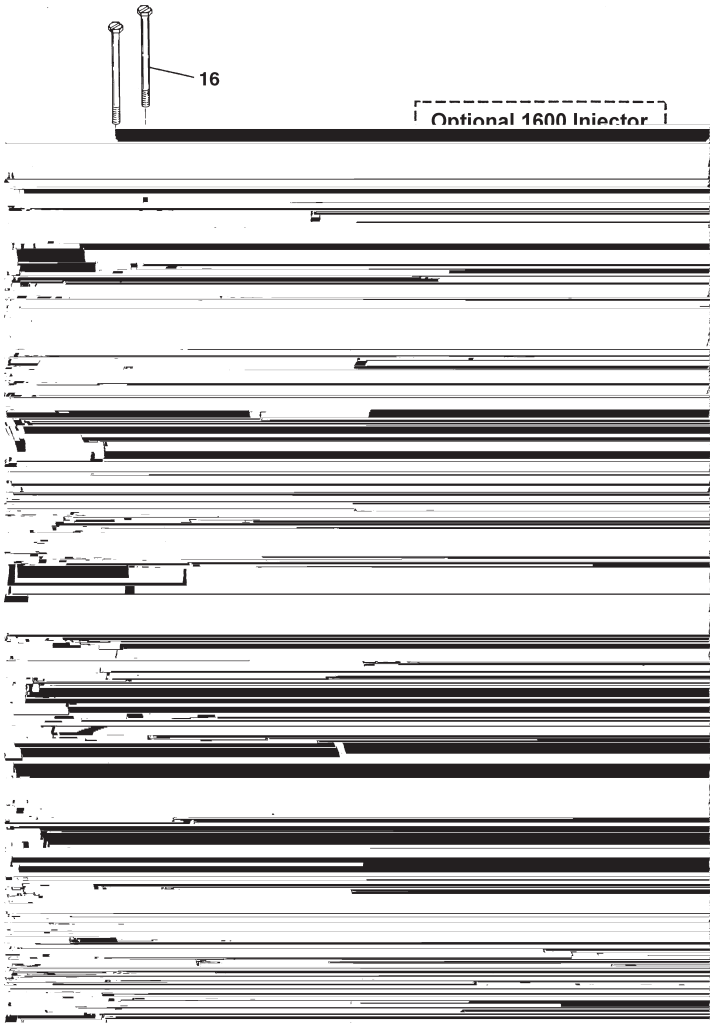

1	1	14749	Valve Body, 2750
2	6	10545	Seal, Piston
3	5	11451	Spacer, 12 Hole
		16589	Spacer, HW
4	1	14451	Piston, 2750
5	1	14452	Rod, Piston
6	1	10234-01	O-Ring, -024, 560CD
7	1	10209	Quad Ring, -010
8	1	10598	End Plug Assembly
		10598-01	End Plug Assembly, Hot Water
9	1	14805	Gasket, Injector Body, 1600/1700
10	1	14802-xxc	Throat, Injector, -xxc is for Injector Size
11	1	17777	Body, Injector, 1700
12	1	14801-xxc	Nozzle, Injector, -xxc is for Injector Size
13	1	14803	Screen, Injector
14	1	10229	Gasket, Injector Cap, 1600
15	1	11893	Cap, Injector, Stainless Steel
		10228	Cap, Injector, Brass
16	2	14804	Screw, Hex Hd Mach, 10-24 x 2-3/4
17	1		Washer - Flow Control (specify size)
18	1	60365-00	Housing, DLFC, 1/2”F x 3/4”F
19	2	11710	O-ring, -215
20	1	11208	O-ring, -232
21	1	12461-01	Adapter Base, 1” 2-1/2” - 8 Quick Connect
22	1	10381	O-ring, -231
23	2	11224	Screw, Hex Hd, 5/16 - 18 x 5/8
24	1	17776	Body, Injector
25	1	10914-xx	Throat, Injector, -xx is for Injector Size
26	1	10913-xx	Nozzle, Injector, -xx is for Injector Size
27	1	10227	Screen, Injector
28	2	10692	Screw, Slot Hex Hd, 10-24 x 18-8 Stainless Steel
29	1	10757	Spacer, End
		10757B	Spacer, End, Brass
30	1	15137	Screw, Hex Wsh Mach, 10-24 x 3/8
	1	16221	Disperser, Air, 1600
	1	17996	Disperser, Air, 1700

1600 BRINE SYSTEM ASSEMBLY

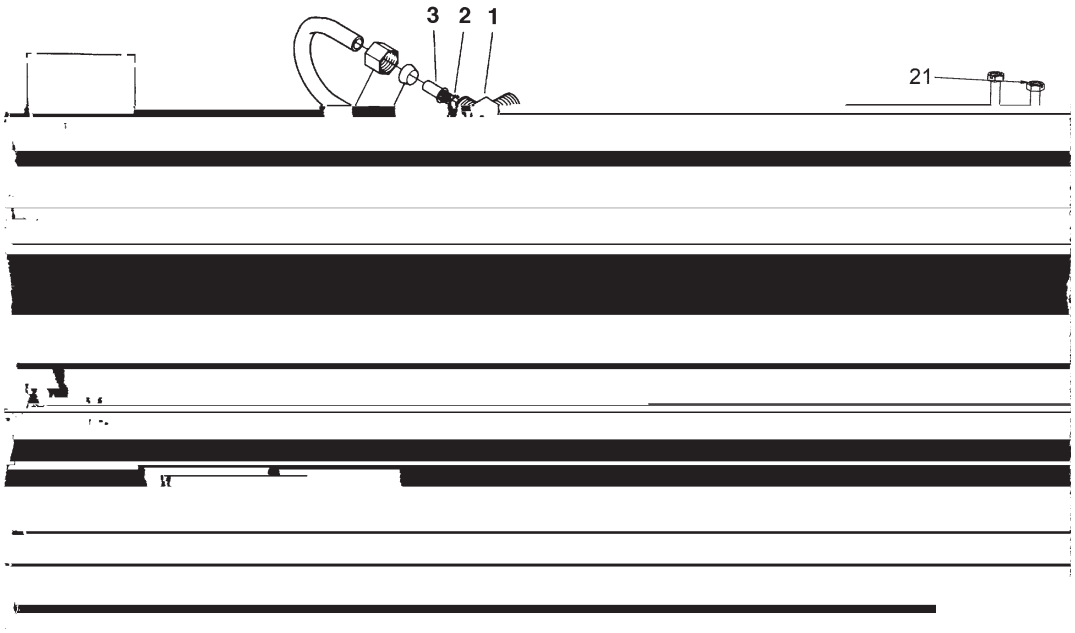

60029 Rev C

1	1	10328	Elbow, 90 Deg. 1/4 NPT x 3/8 Tube
2	1	12767	Screen, Brine
3	2	10332	Fitting, Insert, 3/8
4	3	10329	Fitting, Tube, 3/8 Nut, Brass
5	3	10330	Fitting, Sleeve, 3/8 Celcon
6	1	15221	Tube, Brine Valve, Gray
7	1	60002-34	Air Check, #500
		60003-34	Air Check, #500, HW
8	1	12794	Fitting, Elbow, 90 Deg 3/8, White, Poly Tube
9	1	Not Supplied	Brine Line Tube (3/8” Flexible Tube)
10	1	10250	Ring, Retaining
11	1	11749	Guide, Brine Valve Stem
14	1	10249	Spring, Brine Valve
15	1	12550	Quad Ring, -009
16	1	12748	Brine Valve Body Assy, 1600 w/ Quad Ring
17	1	12552-02	Brine Valve Stem, 1600, w/Seat
18	1	12626	Seat, Brine Valve
19	1	11982	O-ring, -016
20	1	60020-25	BLFC, .25 GPM, 1600
		60020-50	BLFC, .50 GPM, 1600
		60020-100	BLFC, 1.0 GPM, 1600
21	2	10692	Screw, Slot Hex Hd, 10-24 x 18-8
22	1	11893	Cap, Injector, SS
23	1	10229	Gasket, Injector Cap, 1600
24	1	10227	Screen, Injector
25	1	10913-xx	Nozzle, Injector, -xx is for Injector Size
26	1	10914-xx	Throat, Injector, -xx is for Injector Size
27	1	17776	Body, Injector, 1600
28	1	16221	Body, Injector, 1600

1600 BRINE SYSTEM ASSEMBLY

60011 Rev C

1	1	10329	Fitting, Tube, 3/8 Nut, Brass
2	1	10330	Fitting, Sleeve, 3/8 Celcon
3	3	10332	Fitting, Insert, 3/8
4	1	12767	Screen, Brine
5	1	10328	Fitting, Elbow, 90 Deg 1/4 NPT x 3/8T
6	1	17884	Brine Valve Body Assy, 1650
7	1	10249	Spring, Brine Valve
8	1	10250	Ring, Retaining
9	1	17906	Guide, Brine Valve Stem
10	2	19625	Nut Assy, 3/8", Plastic
11	1	12552-02	Brine Valve Stem, 1600, with Seat
12	1	12626	Seat, Brine Valve
13	1	16924	O-Ring, -018
14	1	60010-25	BLFC, 1650, .25 GPM, Plastic
	1	60010-50	BLFC, 1650, .50 GPM, Plastic
	1	60010-100	BLFC, 1650, 1.0 GPM, Plastic
15	1	16508-01	Tube, Brine Valve, 2850/1600
	1	40027	Tube, Brine Valve, 2510
	1	42184	Tube, Brine Valve, 2850s
	1	12774	Tube, Brine Valve, 1500
	1	15221	Tube, Brine Valve, 2750
	1	41683*	Tube, Brine Valve, UF, 1600/1650
16	2	10692	Screw, Slot Hex Hd, 10 - 24X 18-8 Stainless Steel
17	1	11893	Cap, Injector, SS
18	1	10229	Gasket, Injector Cap, 1600
19	1	10227	Screen, Injector
20	1	10913-xx	Nozzle, Injector, -xx is for Injector Size
21	1	10914-xx	Throat, Injector, -xx is for Injector Size
22	1	17776	Body, Injector, 1600
	1	17776-02*	Body, Injector, 1600 Upfow
23	1	16221	Disperser, Air
24	1	14805	Gasket, Injector Body, 1600/1700
25	1	12098	Retainer, Flow Control
26	1	12094	Washer, Flow, .25 gpm
	1	12095	Washer, Flow, .50 gpm
	1	12097	Washer, Flow, 1.00 gpm

*Upfow Only

1700 SERIES BRINE SYSTEM ASSEMBLY

1	1	14792	Plug, End, Brine Valve
2	1	13201	Quad Ring, -020
3	1	12085	Washer, Flow, 1.2 GPM
	1	12086	Washer, Flow, 1.5 GPM
	1	12087	Washer, Flow, 2.0 GPM
	1	12088	Washer, Flow, 2.4 GPM
	1	12089	Washer, Flow, 3.0 GPM
	1	12090	Washer, Flow, 3.5 GPM
	1	12091	Washer, Flow, 4.0 GPM
	1	12092	Washer, Flow, 5.0 GPM
4	1	14785	Retainer, Flow Control
5	3	14811	O-ring, -210, 560CD, Brine
6	1	14798	Spacer, 1700, Brine
7	1	14795	Piston, Brine Valve
8	1	14797	Brine Valve Stem
9	1	14790	Brine Valve Body
10	1	12550	Quad Ring, -009
11	1	15310	Spring, Brine Valve
12	1	10250	Retaining Ring
13	1	15517	Guide, Stem
14	1	15415	Fitting, Insert, 1/2”, Tube
15	2	15414	Nut, 2900, w/Sleeve
16	1	15413	Fitting, Elbow, Male, 1/2T x 3/8 NPT
17	1	15416	Tube, Brine, 2900/2750
	1	16460	Tube, Brine, 2850/2900s
	1	41447*	Tube, Brine, 2900s

1710 BRINE SYSTEM ASSEMBLY

60604 Rev F

1	1	41202	Brine Valve, 1700, Plastic, Top
2	1	14785-01	Retainer, Flow Control
3	1	14811	O-Ring, -210, 560CD, Brine
4	1	14798	Spacer, 1700, Brine
5	1	14795	Piston, Brine Valve
6	1	41203	Stem, Brine, 1710, Plastic, 2900
7	1	41201	Brine Valve, 1700, Plastic, Bottom
8	5	17908	Sleeve, Brine Valve Stem
9	1	12550	Quad Ring, -009
10	3	41547	O-Ring, 2mmx35mm
11	2	15310	Spring, Brine Valve
12	2	10250	Ring, Retaining
13	1	17906	Guide, Brine Valve Stem
14	2	14202-01	Screw, Hex Wsh Mach, 8-32 X 5/16
15	2	41056	Nut Assembly, 1/2” Plastic
18	1	15414	Nut, 2900, w/Sleeve
19	1	15415	Fitting, Insert, 1/2”, Tube
20	1	16460	Tube, Brine, 2850, 2900s
	1	42183	Tube, Brine, 1700/2850s
	1	15416	Tube, Brine, 2900/2750
	1	41447*	Tube, Brine, 2900s U/F
21	1	19925	Gasket, Injector Body, 1700
22	1	17777	Body, Injector, 1700
23	1	14802-xxc	Throat, Injector, -xxc is for Injector Size
25	1	14801-xxc	Nozzle, Injector, -xxc is for Injector Size
26	1	10229	Gasket, Injector Cap, 1600
27	1	10228	Cap, Injector
28	2	14804	Screw, Hex Head Mach, 10 - 24 x 2 3/4
29	1	15413	Fitting, Elbow, Male, 1/2T X 3/8NPT
	1	19151	Washer, Flow, 1.0 gpm
	1	17996	Disperser, Air, Injector
	1	414193-00	Label, Blank, BLFC, 1710

1" METER ASSEMBLY

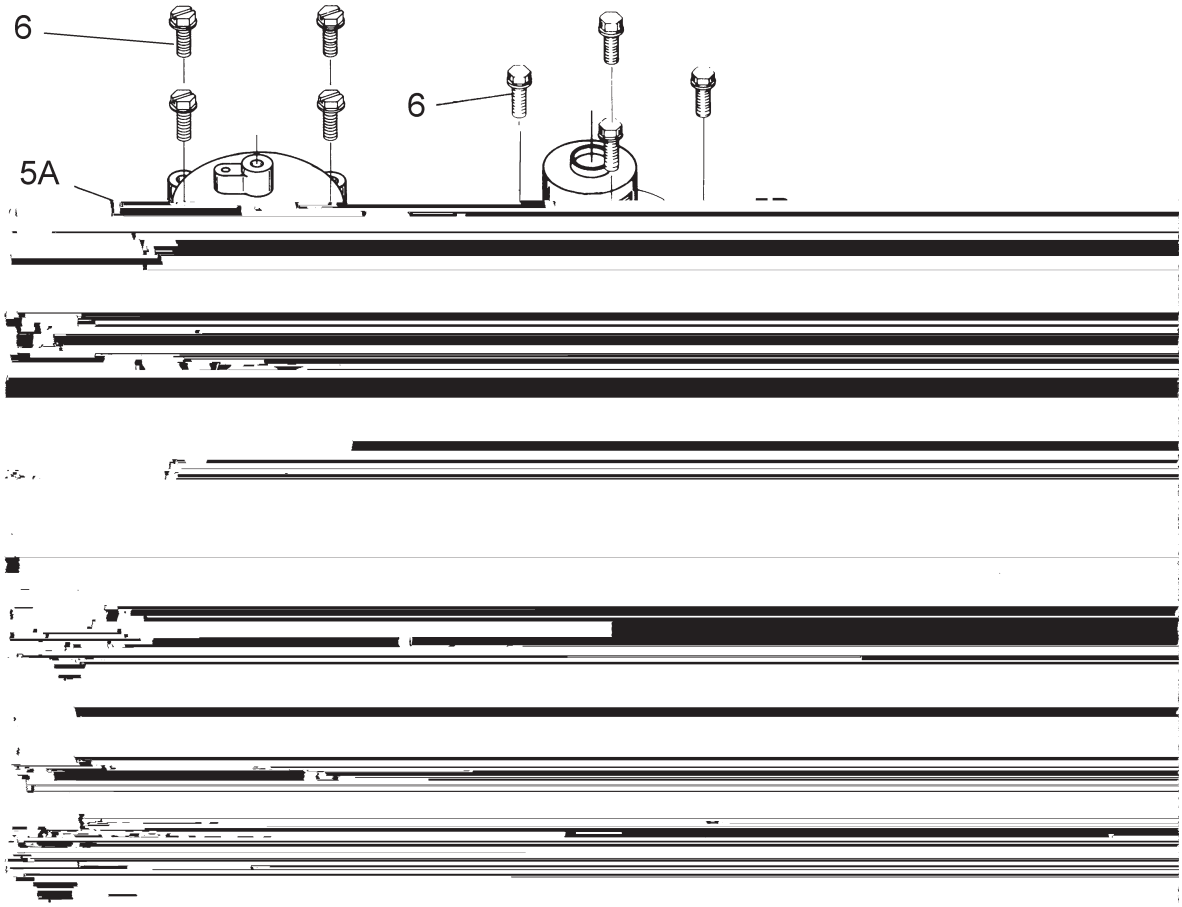

60391 Rev d

1	1	14959	Body, Meter, 2750
2	1	13882	Post, Meter Impeller
3	1	13509	Impeller, Meter
4	1	13847	O-ring, -137, Std/560CD, Meter
5A	1	15218	Meter Cap Assembly, Brass, Hot Water
5B	1	15237	Meter Cap Assembly, Ext, Brass, Hot Water
6	4	12112	Screw, Hex Hd Mach, 10-24 x 1/2
7	1	14960	Flow Straightener, 1”
8	1	13287	O-ring, -123
9	1	14961	Fitting, 1” Quick Connect
10	1	14962	Nut, 1” Meter, Quick Connect

1	15308	Fitting, Coupling, 1”, Brass
1	14038	Meter Cap Assembly, Std, Plastic
1	15150	Meter Cap Assembly, Ext, Plastic

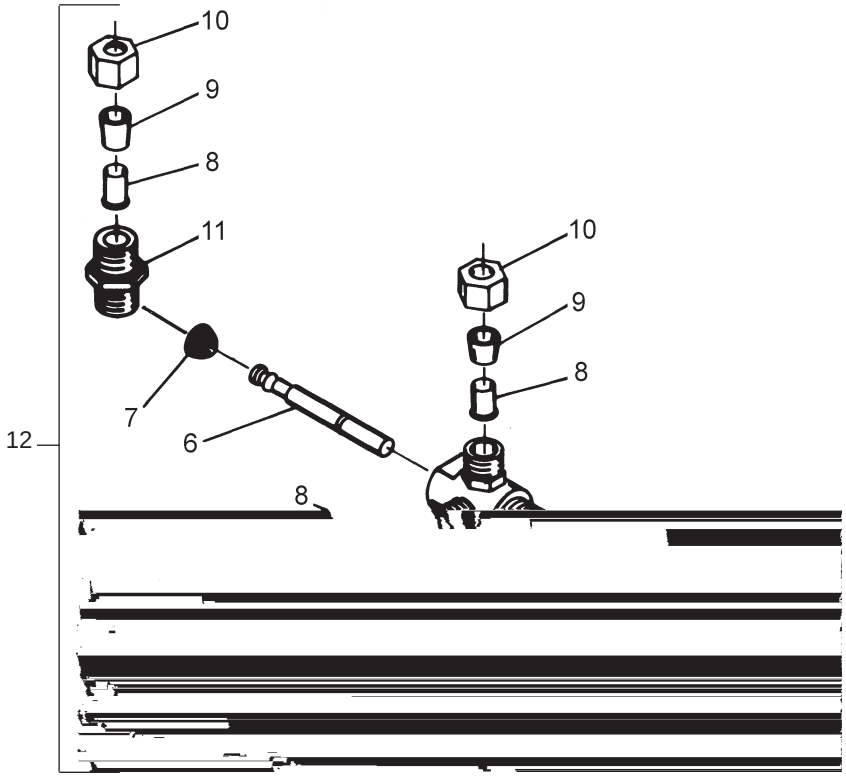

60150 Rev A

1	1	11749	Guide, Brine Valve Stem
2	1	10250	Ring, Retaining
3	1	10249	Spring, Brine Valve
4	1	12550	Quad Ring, -009
5	1	10785	Service Valve Operator Body Assembly Brass Valves
6	1	12552	Brine Valve Stem, 1600
7	1	12626	Seat, Brine Valve
8	3	10332	Fitting, Insert, 3/8
9	3	10330	Fitting, Sleeve, 3/8 Celcon
10	3	10329	Fitting, Tube, 3/8 Nut, Brass
11	1	10331	Fitting, Compression, 1/4” x 3/8”
12	1	60150	Service Valve Assembly, Old Style

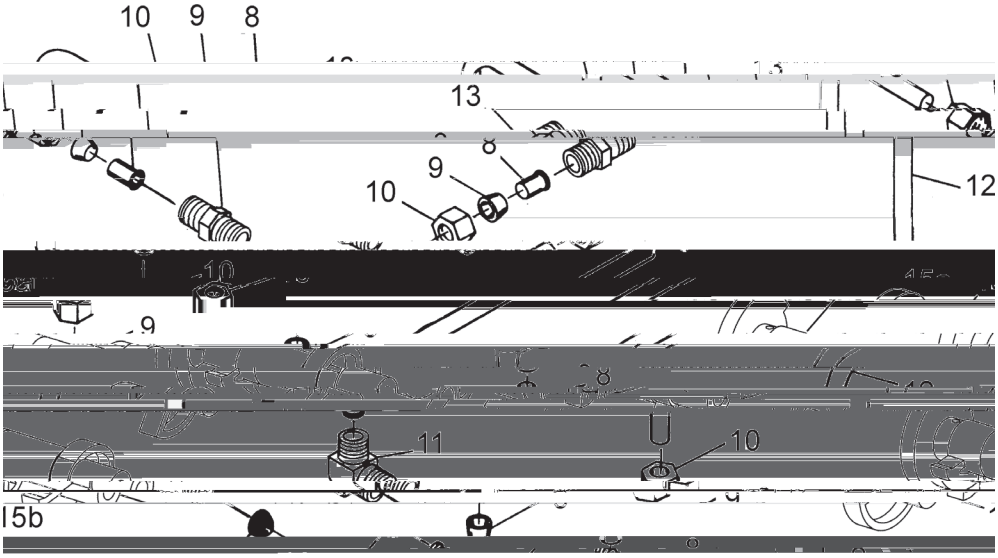

60150 Rev A

1	1	11749	Guide, Brine Valve Stem
2	1	10250	Ring, Retaining
3	1	10249	Spring, Brine Valve
4	1	12550	Quad Ring, -009
5	2	10785	SVO Body Assy Brass Valves
6	1	12552	Brine Valve Stem, 1600
7	1	12626	Seat, Brine Valve
8	5	10332	Fitting, Insert, 3/8
9	5	10330	Fitting, Sleeve, 3/8” Celcon
10	5	10329	Fitting, Tube, 3/8 Nut, Brass
11	1	10328	Fitting, Elbow, 90 Deg 1/4 NPT x 3/8 Tube
12	2	12897	Tube, Fitting, 3/8 x 9 3/4
13	1	16730	Fitting, Male, 1/4 x 1
14	2	15415	Fitting, Insert, 1/2” Tube
15a	1	12472	Cam Assy, Tri-Stack, After RR
15b	1	15770	Cam Assy, Special Tri-Stack After Brine Fill
16	1	12114	Bracket, Motor Outboard, Coated
17	1	60150-01	Service Valve Operator Assy, 1600, New Style, Item Nos 1-11

60027 Rev D

1	1	.....	60027-00	Safety Brine Valve, 2300, Less Elbow
2	1	.....	10138	Ball, 3/8", Brass
3	1	.....	11566	Ball Stop, Slow Fill
4	1	.....	10328	Fitting, Elbow, 90 Deg. 1/4 NPT x 3/8 Tube
5	1	.....	10332	Fitting, Insert, 3/8
6	1	.....	10330	Fitting, Sleeve, 3/8 Celcon
7	1	.....	10329	Fitting, Tube, 3/8 Nut, Brass
8	1	.....	10186	Nut, Hex, 10-32
9	1	.....	60002-34	Air Check, #500, 34" Long
		.....	60003-34	Air Check, #500, HW, 34" Tube
10	1	.....	10149	Rod, Float
11	1	.....	10700	Float Assy, White
12	3	.....	10150	Grommet, .30 Dia

1	1	19645	Body, Safety Brine Valve, 2310
2	1	19803	Safety Brine Valve Assy
3	1	19804	Screw, Sckt Hd, Set, 10-24 x .75
4	1	19805	Nut, Hex, 10-24, Nylon Black
5	1	19652-01	Poppet Assy, SBV w/O-ring
6	1	19649	Flow Dispenser
7	1	11183	O-ring, -017
8	1	19647	Elbow, Safety Brine Valve
9	2	19625	Nut Assy, 3/8” Plastic
10	1	18312	Retainer, Drain
11	1	60014	Safety Brine Valve Assy, 2310
12	2	10150	Grommet, .30 Dia
13	1	60068-30	Float Assy, 2310, w/30” Rod
14	1	60002-34	Air Check, #500, 34” Long

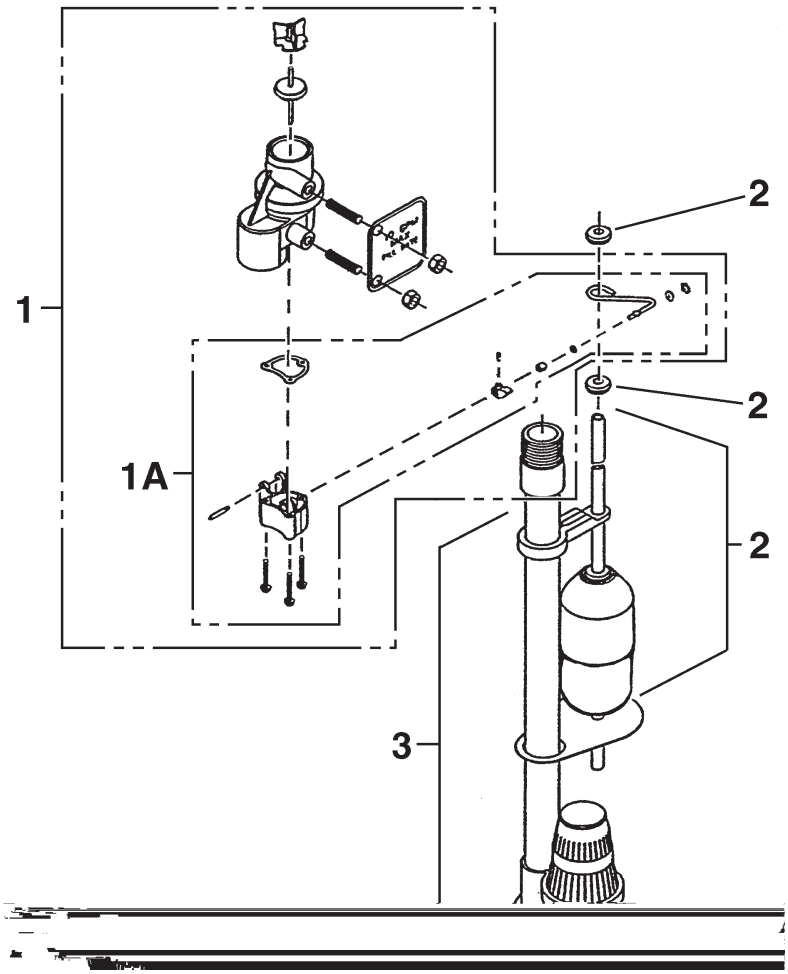

42303 REV A

1	1	60038	Safety Brine Valve, 2350
1A	1	61024	Actuator Assembly, 2350 Brine
2	1	60028-30	Float Assembly, 2350, 30” Wht
	1	60026-30SAN	Float Assembly, 2350, 30”, HW
3	1	60009-00	Air Check, #900, Commercial Less Fittings
	1	60009-01	Air Check, #900, Commercial, HW Less Fittings

Not Shown:

	1	18603	Fitting Assembly, 900 Air Check 2350
	1	18602	Fitting Assembly, 900 Air Check

		Correction
Water conditioner fails to regenerate.	Electrical service to unit has been interrupted	Assure permanent electrical service (check fuse, plug, pull chain, or switch)
	Timer is defective.	Replace timer.
	Power failure.	Reset time of day.
Hard water.	By-pass valve is open.	Close by-pass valve.
	No salt is in brine tank.	Add salt to brine tank and maintain salt level above water level.
	Injector screen plugged.	Clean injector screen.
	Insuffcient water fowing into brine tank.	Check brine tank fll time and clean brine line fow control if plugged.
	Hot water tank hardness.	Repeated fushings of the hot water tank is required.
	Leak at distributor tube.	Make sure distributor tube is not cracked. Check O-ring and tube pilot.
	Internal valve leak.	Replace seals and spacers and/or piston.
Unit used too much salt.	Improper salt setting.	Check salt usage and salt setting.
	Excessive water in brine tank.	See "Excessive water in brine tank".
Loss of water pressure.	Iron buildup in line to water conditioner.	Clean line to water conditioner.
	Iron buildup in water conditioner.	Clean control and add mineral cleaner to mineral bed. Increase frequency of regeneration.
	Inlet of control plugged due to foreign material broken loose from pipes by recent work done on plumbing system.	Remove piston and clean control.
Loss of mineral through drain line.	Air in water system.	Assure that well system has proper air eliminator control. Check for dry well condition.
	Improperly sized drain line fow = ضٔ brine time line	

Reserve capacity has been exceeded.

Correction: Check salt dosage requirements and reset program wheel to provide additional reserve.

Program wheel is not rotating with meter output.

Correction: Pull cable out of meter cover and rotate manually. Program wheel must move without binding and clutch must give positive clicks when program wheel strikes regeneration stop. If it does not, replace timer.

Meter is not measuring flow.

Correction: Check meter with meter checker.

WATER CONDITIONER FLOW DIAGRAMS

1 Service Position

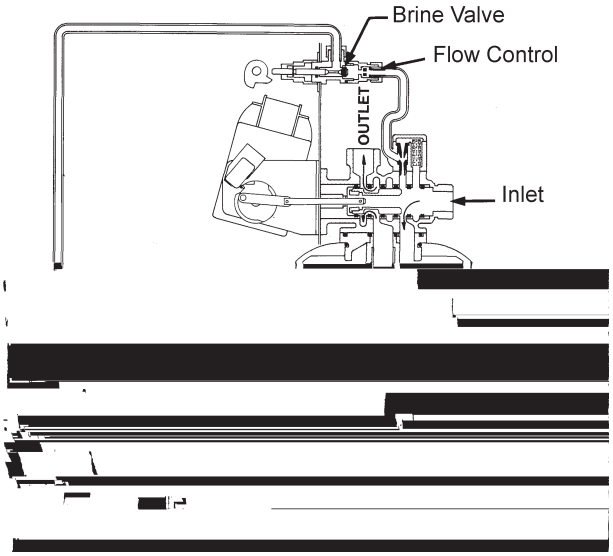

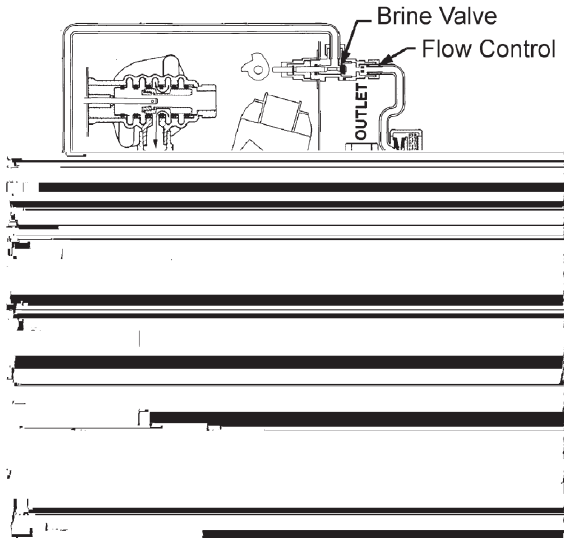

3 Brine Position

4 Slow Rinse Position

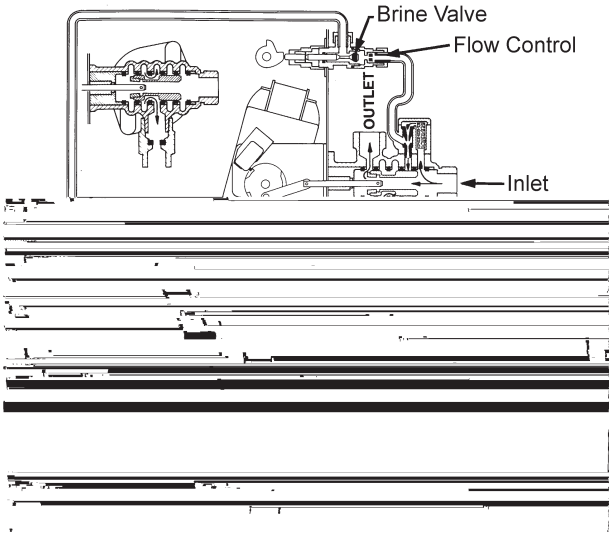

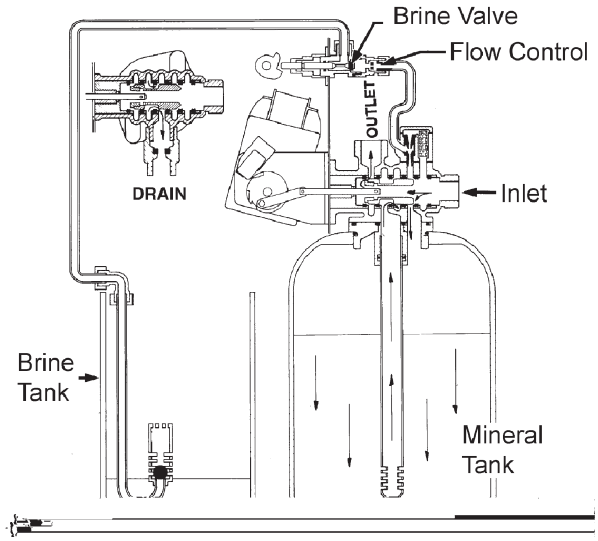

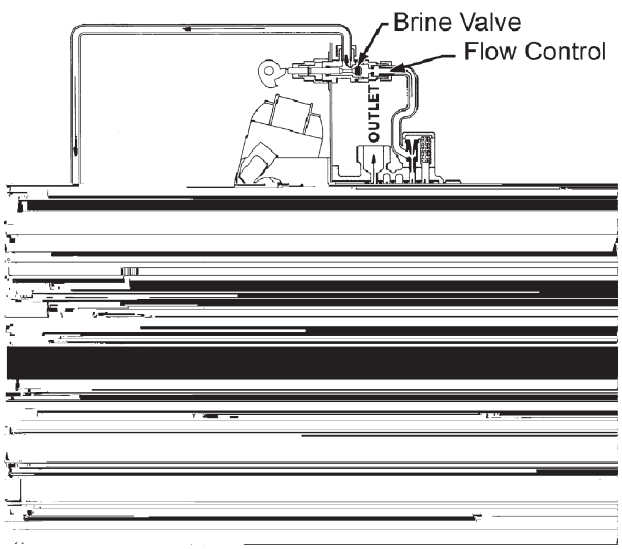

FLOW DATA & INJECTOR DRAW RATES

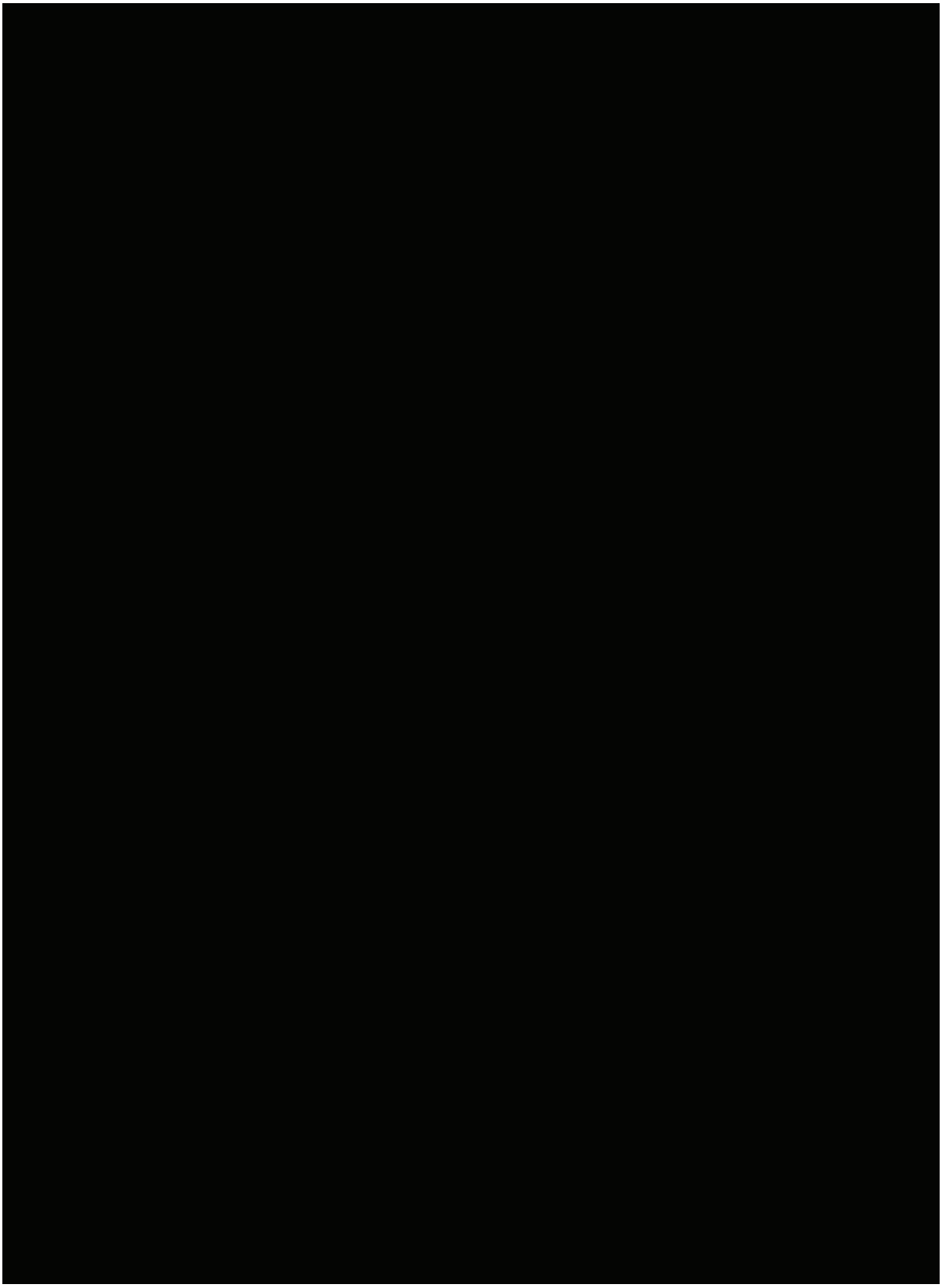

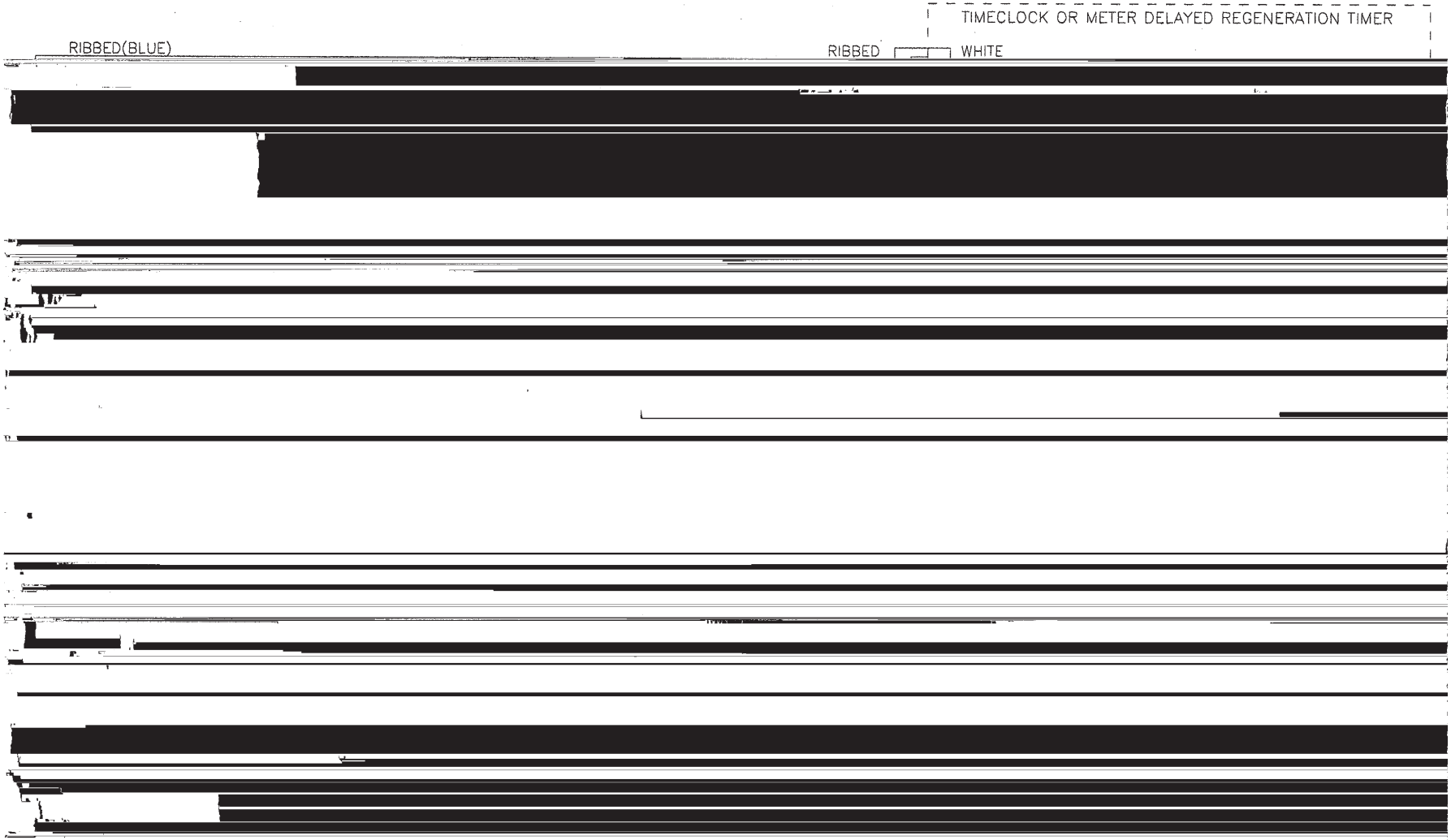
TIMECLOCK OR METER DELAYED REGENERATION TIMER
RIBBED(BLUE)
RIBBED
WHITE

SYSTEM #4 REMOTE SIGNAL START

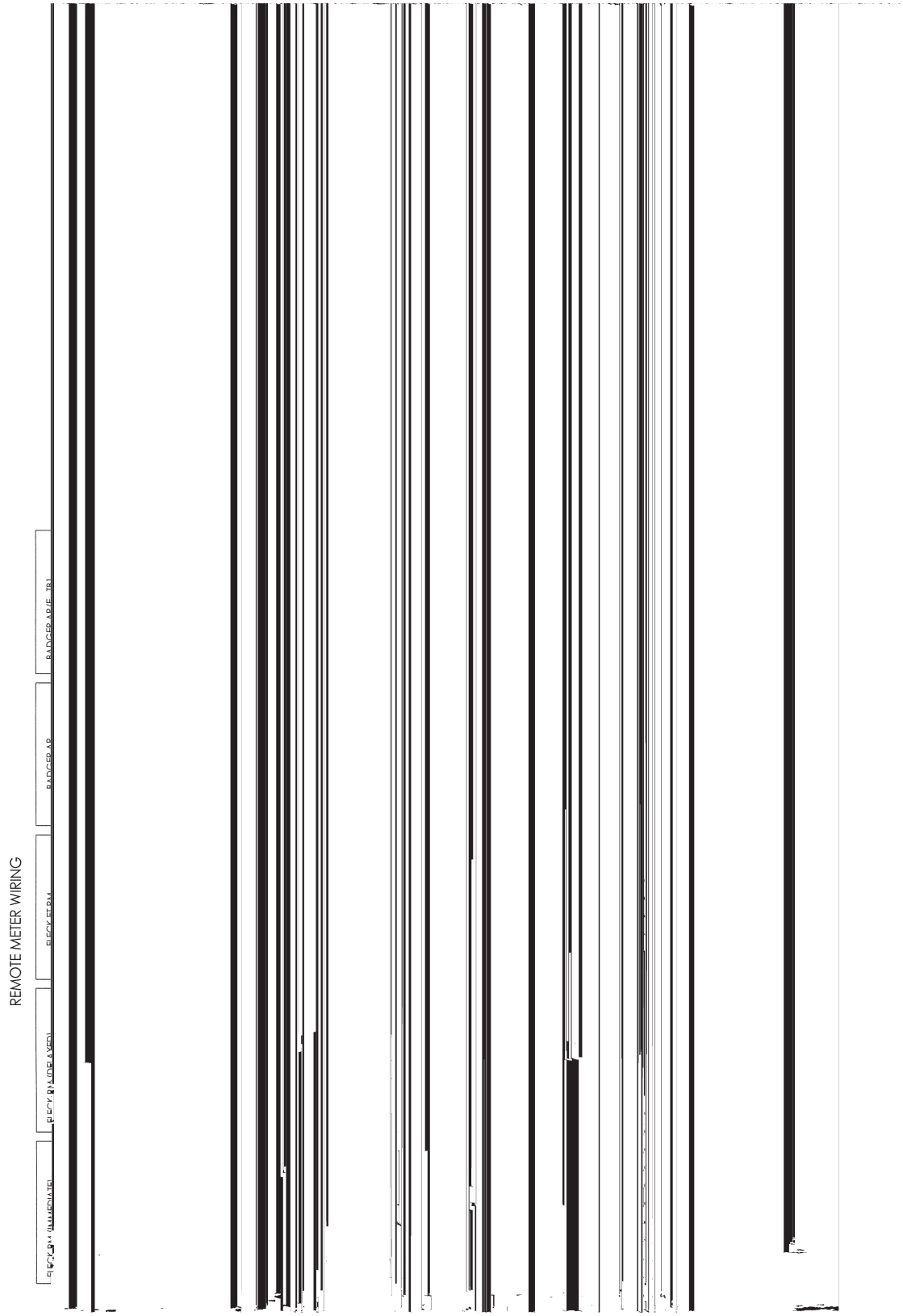

13768 Rev G

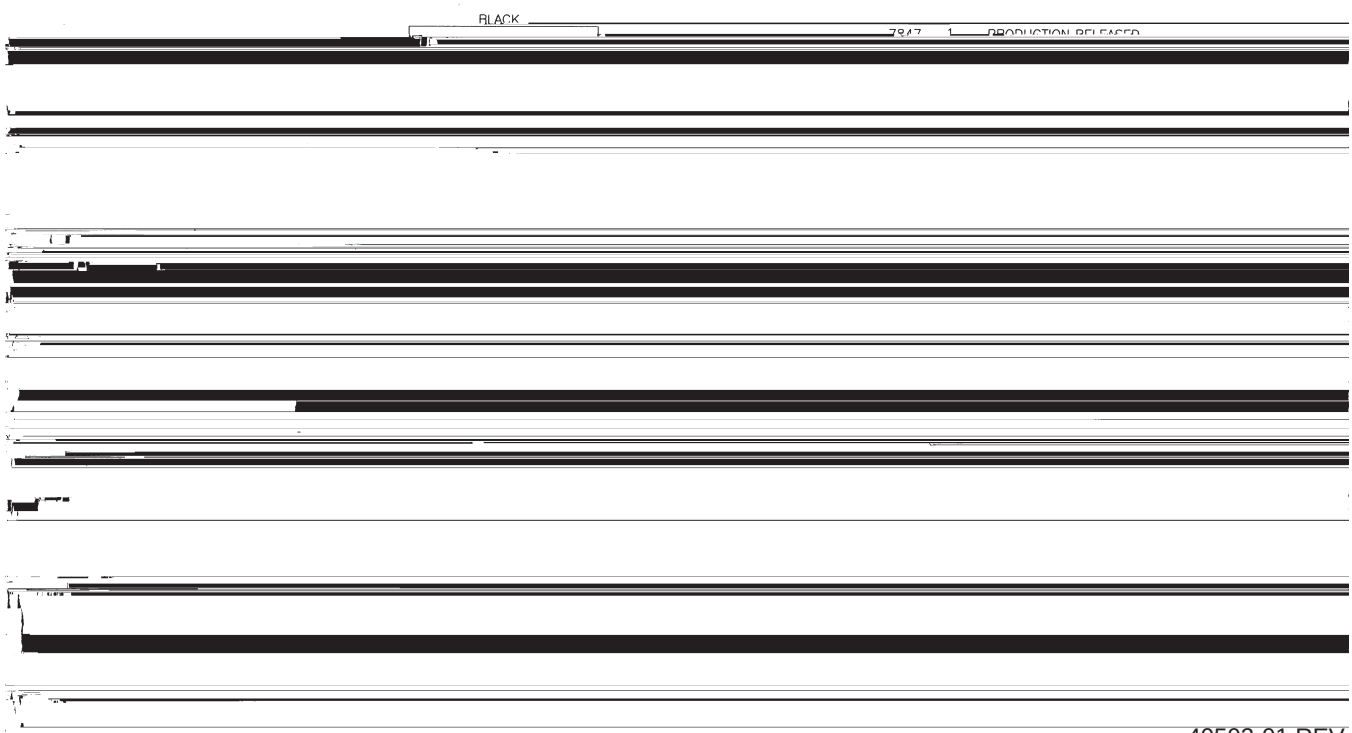

40502-01 REV C

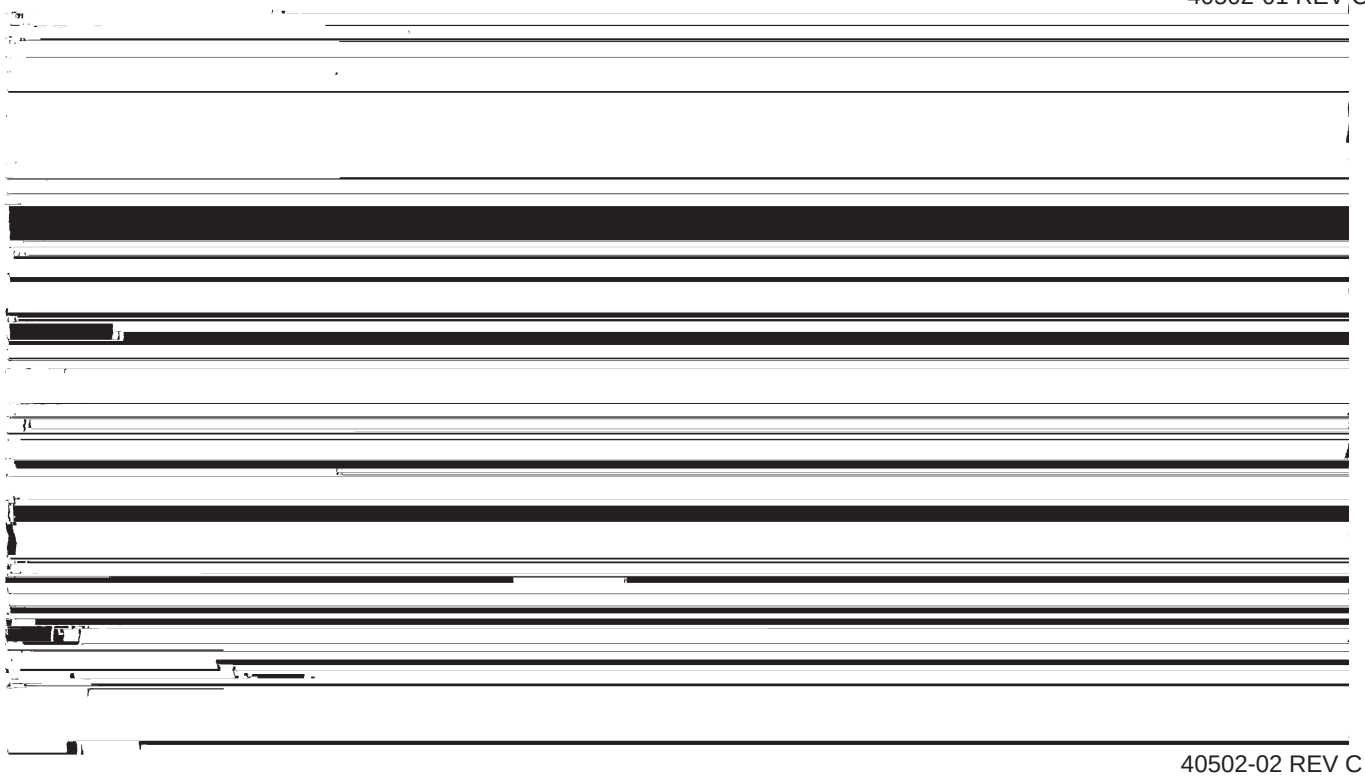

40502-02 REV C

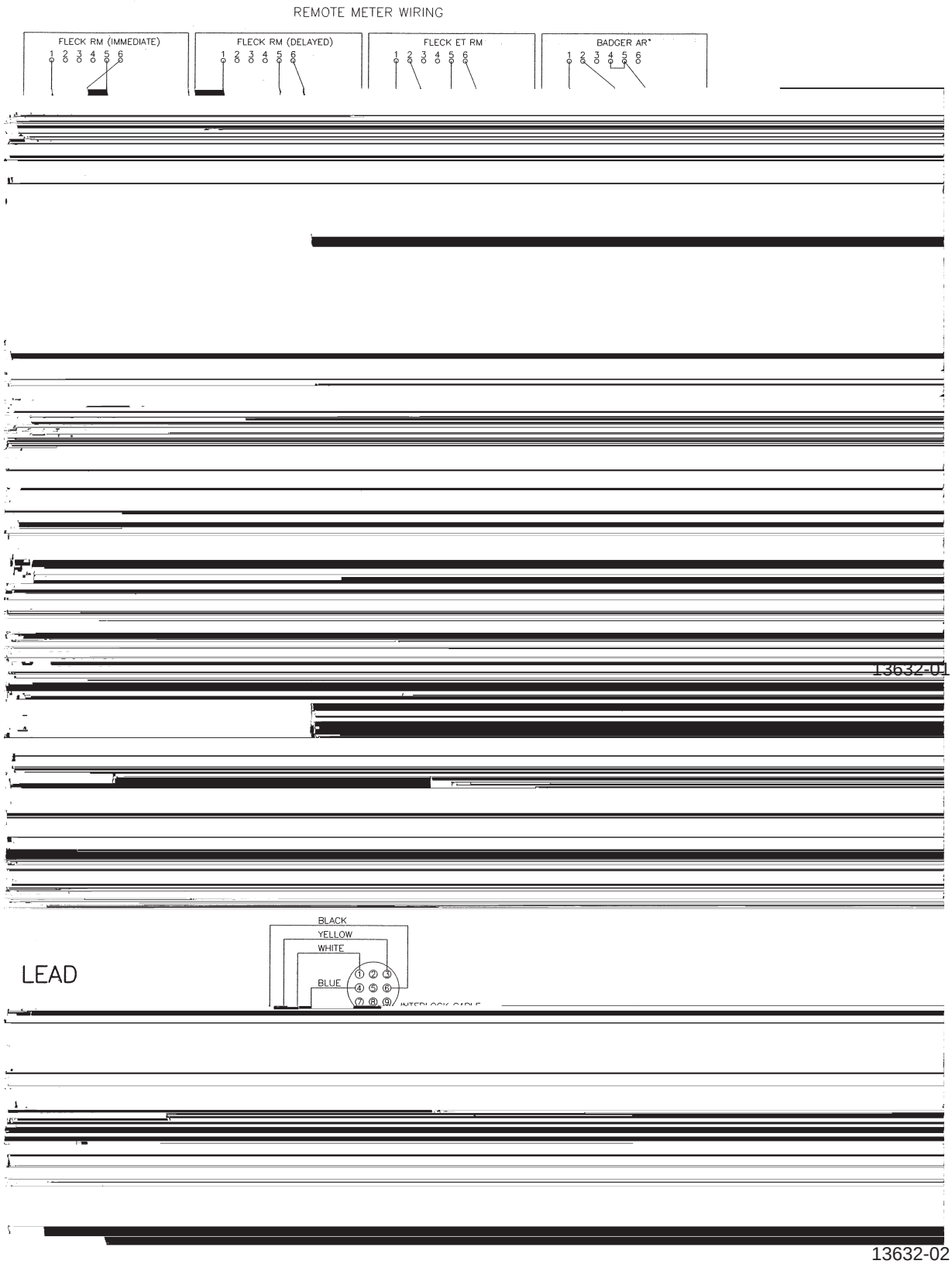

13632-01 REV L

13632-02 REV L

19138-01 REV E

19138-02 REV E

19205.....Gear Assy, 24 Hour, Silver, 5600, 12AM
60519-02 .....Gear Assy, 24 Hour, 2 Times a Day Regen
60519-03 .....Gear Assy, 24 Hour, 3 Times a Day Regen
60519-04 .....Gear Assy, 24 Hour, 4 Times a Day Regen
60519-06 .....Gear Assy, 24 Hour, 6 Times a Day Regen

60002-34 .....Air Check, #500, 34” Long
60003-34 .....Air Check, #500, HW, 34” Tube
60009-00 .....Air Check, #900, Commercial, Less Fittings
60009-01 .....Air Check, #900, Commercial, HW Less Fittings

60010-25 .....BLFC, 1650, .25 gpm
60010-50 .....BLFC, 1650, .50 gpm
60010-100 .....BLFC, 1650, 1.00 gpm
60020-25 .....BLFC, 1600, .25 gpm
60020-50 .....BLFC, 1600, .50 gpm
60010-100 .....BLFC, 1600, 1.00 gpm

60011-xx.....1650 Brine Valve
60029-xx.....1600 Brine Valve
60034-xx.....1700 Brine Valve
60604-xx.....1710 Brine Valve
-xx is for fow button size

60160-15 .....Drive Cam Assy, Std, Blue

60365-xx.....Brass DLFC 3/4” NPT

60050-21 .....Drive Assy, 2750, STF, 120V Softener

60480-xx.....1600 Injector Assembly
60485-xx.....1600 Injector Assembly
60381-xx.....1700 Injector Assembly
60486-xx.....1700 Injector Assembly
-xx is for the size injector used

Meters:
60391.....2750 Meter Assy, Std, Plastic Cap, 1"
60392.....2750 Meter Assy, Ext, Plastic Cap, 1"

Covers:
60232-110.....Cover, Designer, 1pc, Black
60219-02 .....Cover Assy, Enviromental, Black

60090-HF.....Piston Assy, 2750/2900
60091-HF.....Piston Assy, 2750, Hot Water
60101-00 .....Piston Assy, 2750 NHWBP Filter, Conversion Kit
60101-01 .....Piston Assy, 2750 NHWBP
60101-02 .....Piston Assy, 2750 NHWBP, 1600 Conversion Kit
60101-03 .....Piston Assy, 2750 NHWBP, 1700 Conversion Kit

60320-12 .....Switch Kit, 1500 through 2850
60320-02 .....Switch Kit, 3200/9000 Timer

60405-20 .....Program Wheel, w/3/4” Ext Label 1-1/2” Std
60405-30 .....Program Wheel, w/1" Std
60405-40 .....Program Wheel, w/1" Ext
60405-70 .....Program Wheel, w/1-1/2” EXT

60014.....Safety Brine Valve Assy, 2310
60038.....Safety Brine Valve, 2350
60027-FFA.....Safety Brine Valve Body, 2300 Fitting Facing Arm
60027-FFS.....Safety Brine Valve Body Fitting Facing Stud
60026-30 .....Float Assy, 2350, 30” Red/Wht
60026-30SAN.....60026-30SAN Float Assy, 2350, 30” HW
60028-30 .....Float Assy, 2300, 30”, Blue/White
60068-30 .....Float Assy, 2310, w/30” Rod

40737.....Literature, Spec Sheet
42327.....Literature, 2750 D/F
40717.....Literature, Catalog Assy, PWT
.....Residential/Commercial

60121.....Seals & Spacers, 2750
60122.....Seal & Spacer Kit, 2750 H/W

14860.....Skipper Wheel Assy, 7 Day
14381.....Skipper Wheel Assy, 12 Day

© 2010 Pentair Residential Filtration, LLC